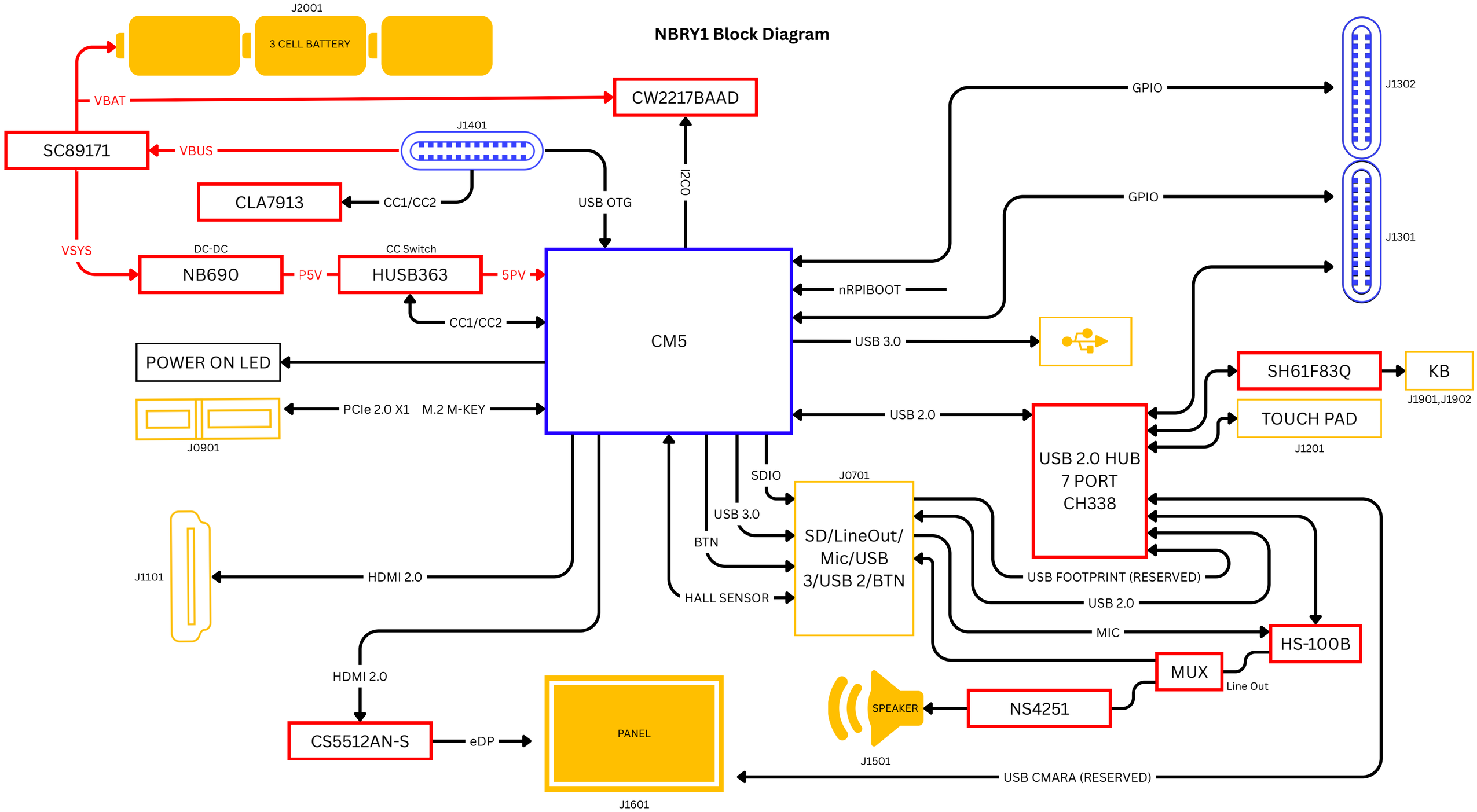NBRY1 Block Diagram